Insert your company name
Address
ZIP and town
Telephone

Manufacturer:	**Model:**
chassis number:	**Driven km/miles:**
Licence plate no.:	**Tyre pressure: (psi)** left part: ____ ____ ____
Vehicle owner:	right part: ____ ____ ____

Measurement report for wheel alignment

Camber, Caster, SAI/KPI, Toe-out-on-turns, Steer gear middle pos., Out of square	measured data in degrees [°]
Single Toe, Total Toe, Axle Offset	measured data in millimetre [mm]

before alignment		after alignment
	Camber	
	Toe left	
	Caster	
	SAI / KPI	
	Toe-out-on-turns	

before alignment		after alignment
	Camber	
	Toe right	
	Caster	
	SAI / KPI	
	Toe-out-on-turns	

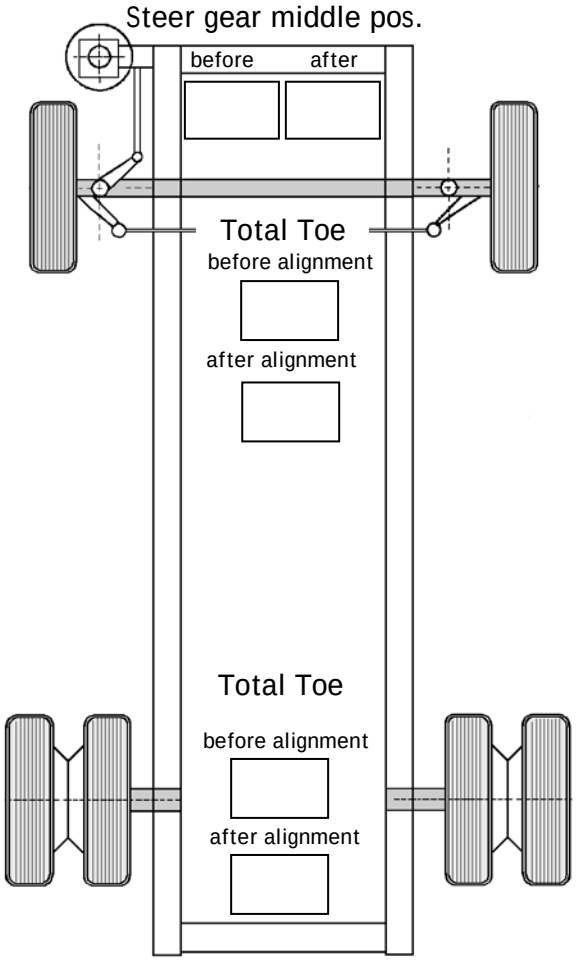

before alignment		after alignment
	Camber	
	Out of square	
	Axle Offset	

before alignment		after alignment
	Camber	
	Out of square	
	Axle Offset	

Mechanic:	**Date:**
Notes for Vehicle:	

HAWEKA AG
Kokenhorststraße 4
30938 Burgwedel
Tel. +49 5139/8996-0
Fax: +49 5139/8996-222
www.haweka.com
info@haweka.com